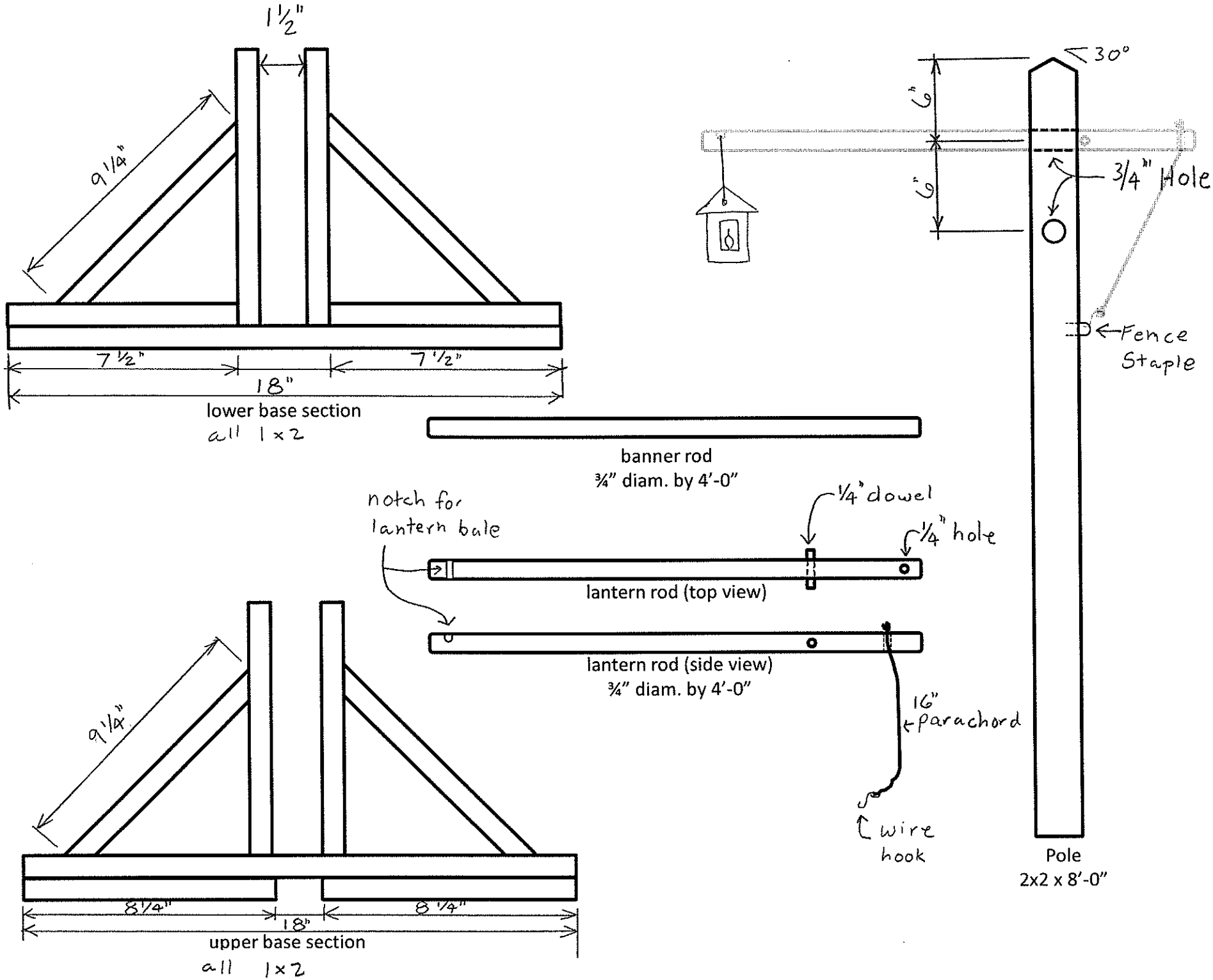
1½"
9¼"
7½"
7½"
18"
lower base section
all 1x2
banner rod
¾" diam. by 4'-0"
notch for lantern bale
¼" dowel
¼" hole
lantern rod (top view)
lantern rod (side view)
¾" diam. by 4'-0"
16" parachord
wire hook
9¼"
8¼"
8¼"
18"
upper base section
all 1x2
30°
6"
6"
¾" Hole
Fence Staple
Pole
2x2 x 8'-0"